Technical Data Sheet

atlantic uk
architectural hardware

FCR422(finish) FORME® BOSTON ON CONCEALED ROUND ROSE

Product Code	FCR422(finish)
Product Name	Forme® Boston Lever on Concealed Round Rose
Product Description	Boston Lever Door Handle on Concealed Round Rose
Product Base Material	Zinc Alloy – high grade
Available Finishes	Polished Chrome (PC) Matt Black (MB)
Other Information	To be cleaned using a soft damp cloth. Chemicals, solvents or abrasives will damage the applied finish. Due to all Concealed Rose levers being unsprung, it is essential that they are fitted with our AGB Magnetic locks. The spring mechanism in the AGB locks has been tested and it will return the handle to a horizontal position. Atlantic cannot guarantee that the lever will correctly operate when using any alter native lock or latch. If any alternative lock or latch is chosen to be fitted, the user must ensure themselves prior to fitting that the product is compatible and meets the performance levels required. 10 Year Mechanical Guarantee subject to fitting requirements.
Matching WC Turn:	FCRWC(finish)
Matching ESC:	FCRESCE(finish)

Dimensions

Lever Length: 140mm

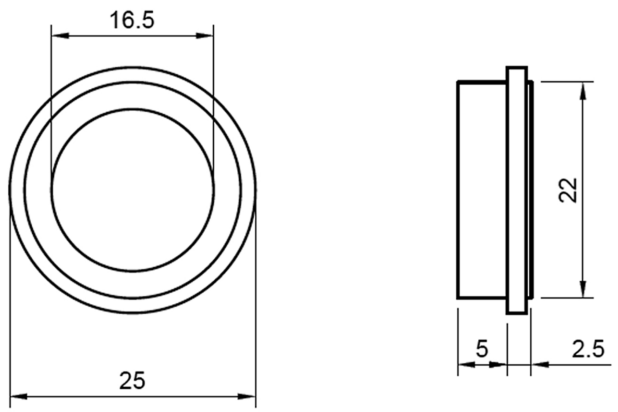

Product Image

Finish Photographed: Polished Chrome (PC)

Care of Finish

In the unusual event of this product failing mechanically, we will replace it free of charge, providing you can supply us with the faulty product and a receipt to show proof of purchase. If the items are not fitted in accordance with the fitting instructions, in a correct application, this may not apply.

Products have an applied finish, and we do recommend regular cleaning with a soft cloth. If necessary, you may moisten the cloth, with water. If this is not effective in removing accumulated deposits, try using a PH-neutral soap on a soft cloth, then remove the soap immediately after application, with the help of a clean, moist, soft cloth. Under no circumstances should you use an abrasive/hard tool, chemical, acidic or abrasive substance to clean these products. This will break down the applied finish. The finish may chip or scratch if subjected to impact from sharp items such as keys and jewellery. Atlantic UK retains the right to send items away for chemical testing to analyse if the product has come into contact with any abrasive or chemical substance before issuing replacements.

Please be aware that in environments where there are high concentrations of chemicals in the air, for example from the use of low-quality paint or corrosive agents, corrosion and damage may occur to the surface of the product. Products should therefore not be fitted in such environments, until the high concentration of chemicals in the air has subsided.

the finish matters

sales@atlanticgb.com 0800 9020 486 www.atlantichandles.co.uk